COOPER® ACCUSEAL

a COOPER® Valves brand.







COOPER® Valves

Table of Contents

Why COOPER® Accuseal

Why make COOPER® Accuseal your severe service metal-seated ball valve of choice? 2
There is a Difference! 2
COOPER® Accuseal Advantages Deliver Predictable Reliability and Performance 2
Optimized Ball Valve Design and Engineering Software 2
Superior Valve Coatings 3
Omni-Lap 360°™ 3
Vacuum Seal Test 3

Power Plant Applications

Typical Combined Cycle 4
Typical Fossil Fueled 5

SPV Features & Benefits

Features & Benefits 6

SPV - Steam Power Valve

SPV Advantages 8
ASME 600 / 900 / 1500 Limited Class 9
ASME 3200 Limited Class 10
ASME 4500 Limited Class 11

CSV - Critical Service Valve

CSV Advantages 12
ASME 150 / 300 / 600 / 900 / 1500 / 2500 / 4500 13

ARV - Automated Relief Valve

ARV Advantages 14
ASME 1500 / 2500 / 3100 LTD / 4500 LTD 15

COOPER® Accuseal Quality

General Information 16

Discover

the COOPER® Accuseal

advantages...

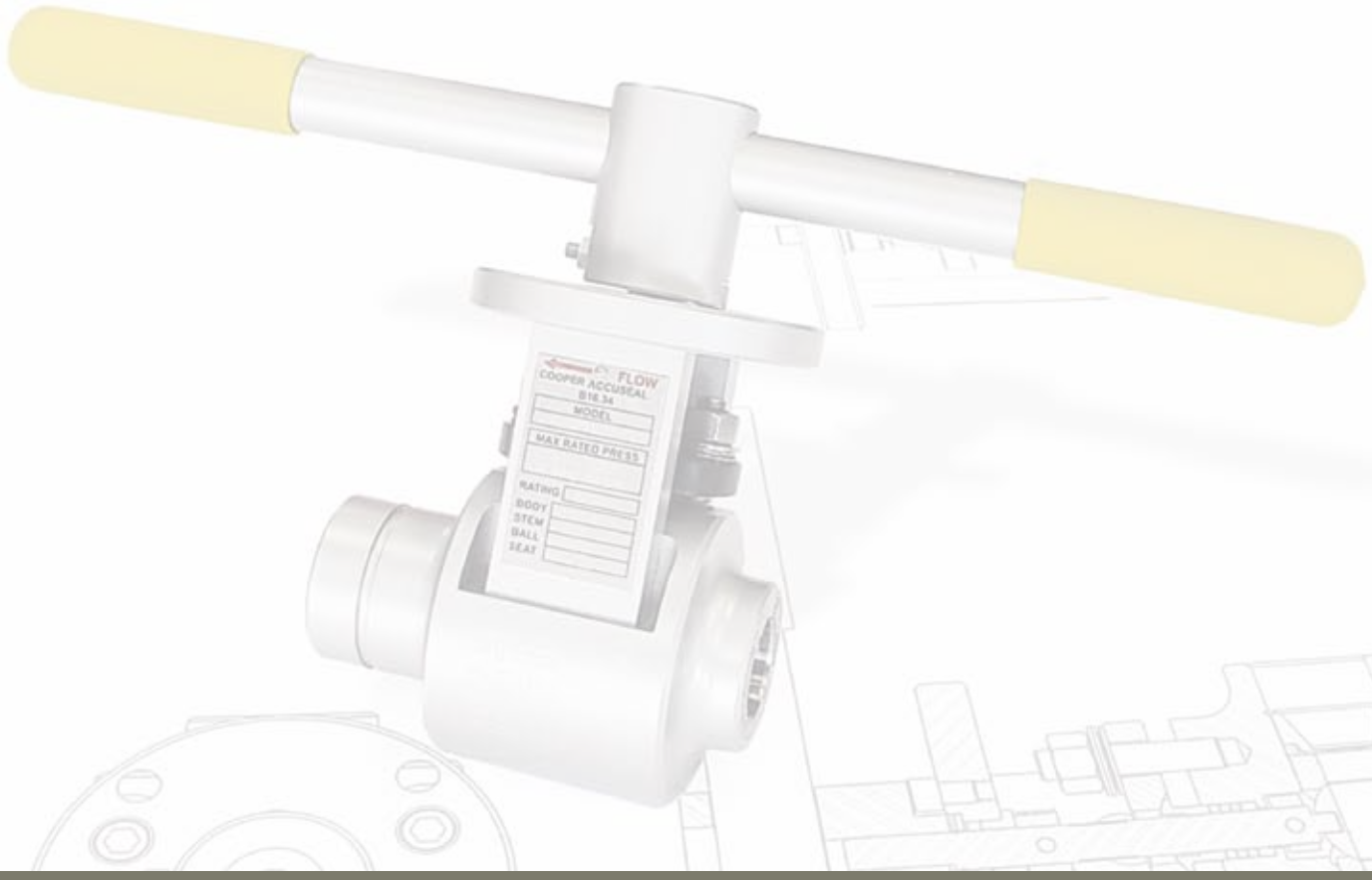

Why make COOPER® Accuseal your severe service metal-seated ball valve of choice?

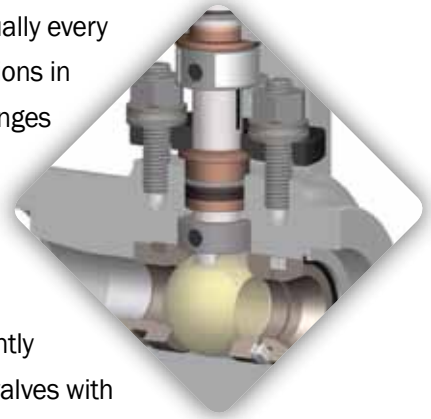

Demands on power generation plants are unprecedented. In combined cycle plants virtually every unit is required to perform as a flexible generating plant, swinging in response to fluctuations in energy demand. Mechanical equipment, including valves, must meet the frequent challenges relating to cycling and thermal transience. Reliable, repeatable isolation has never been more critical.

There is a Difference!

Many claim to be the best. All have a ball, seat and stem. But which valve most consistently provides isolation under the most challenging of conditions? You choose severe service valves with care because the consequences of failure are severe.

COOPER® Accuseal valves provide many advantages in power generation applications.

COOPER® Accuseal Advantages Deliver Predictable Reliability and Performance

- **Optimized Ball Valve Design and Engineering Software**
  Proprietary software fast tracks optimal valve engineering.
- **Superior Valve Coatings**
  COOPER® Accuseal state-of-the-art HP-HVOF (high pressure – high velocity oxygen fuel) coatings provide maximum protection for longer valve life.
- **Omni-Lap 360°™**
  COOPER® Accuseal's proprietary mate-lapping process laps the entire spherical surface of the ball and seat surface, not just the sealing band areas.
- **Vacuum Seal Test**
  COOPER® Accuseal tests the ball to seat seal prior to valve assembly, ensuring seal integrity.

Optimized ball valve design and engineering software

Extensive severe service ball valve engineering experience is combined with proprietary valve optimization CAD/CAM/CAE software that informs and fast-tracks optimized valve design. Service conditions are simulated, providing feedback with engineering analysis, FEA (Finite Element Analysis) and CFD (Computational Fluid Dynamics). Beginning to end, the most current Product Life-Cycle Management (PLM) software is used. Advantages include:

- **Thermally stabilized seat geometry allows for rapid sealing recovery during high thermal transience**
- **Optimized ball/seat sealing engagement**
- **Line of sight bore for totally unobstructed media flow**
- **Optimized ball/stem tang interface**

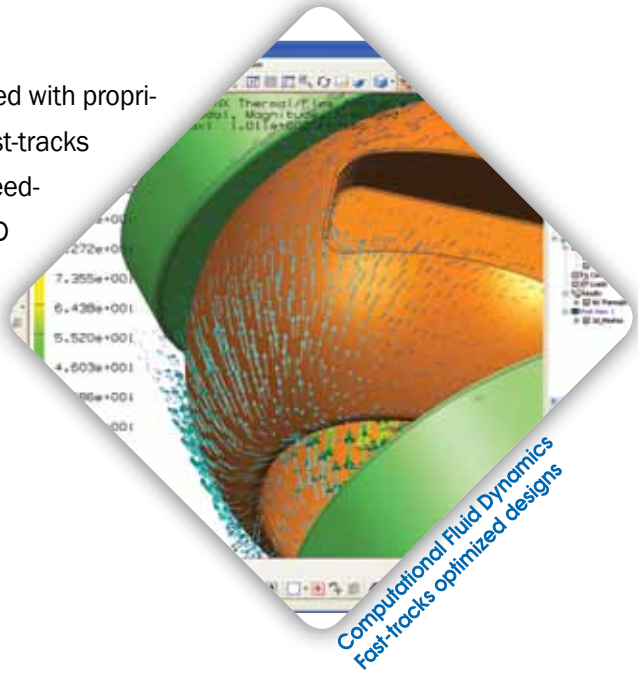

Superior valve coatings

Not all HVOF coatings are equal. COOPER® Accuseal's specified HVOF coating formulas are the most consistent and least porous available, matched to the ball/seat material. State of the art technology applies the coating at the highest velocity for greatest density coverage, superior bond strength and surface hardness. Ongoing research ensures the most reliable coating is matched to service conditions.

- Superior coating performance under thermal stress and media bombardment
- Longer valve life with smooth surface integrity
- No place for leak paths to develop
- Reduced torque values to operate the valve

***Highly engineered fused coatings for Class 4500 extreme applications are available.**

Omni-Lap 360°™

Proprietary mate-lapping produces the tightest, most reliable seal available.

All metal seated ball valves rely on continuous, unbroken contact between the metal ball and seat to create an isolating seal. **Omni-Lap 360°™** mate-laps the entire ball and seat for optimal roundness, producing 100% ball to seat contact, regardless of positioning.

Omni-Lap 360°™ 100% contact Seals in any position

Traditional cup-lapping methods mate only the sealing band of the ball to seat surfaces creating ridges that distort the ball's roundness and compromise the coating thickness. The sealing "sweet spot" originates a leak path if even slightly misaligned resulting in reduced valve life, more maintenance and higher actuation costs.

Omni-Lap 360°™	Traditional Lapping
• Automated lapping of the entire spherical surface • Consistent 100% roundness • Uniform coating thickness • Seals in any position • 100% ball to seat contact • Smooth surfaces reduce friction for lower torques	• Laps only a sealing band • Distorts roundness • Compromises coating thickness • Creates ridges around "sweet spot" • Surface irregularities cause higher torques

Traditional mate-lapping selectively laps the seat to only one side of the ball, resulting in imperfect spherical geometry and non-uniform coating thickness.

Vacuum Seal Testing

COOPER® Accuseal vacuum testing of every ball and seat prior to assembly verifies 100% ball to seat seal to Class VI shut-off.

- Seal reliability is ensured
- Greater manufacturing efficiency means lower cost
- Easier valve assembly — in the factory and in the field

Typical Combined Cycle

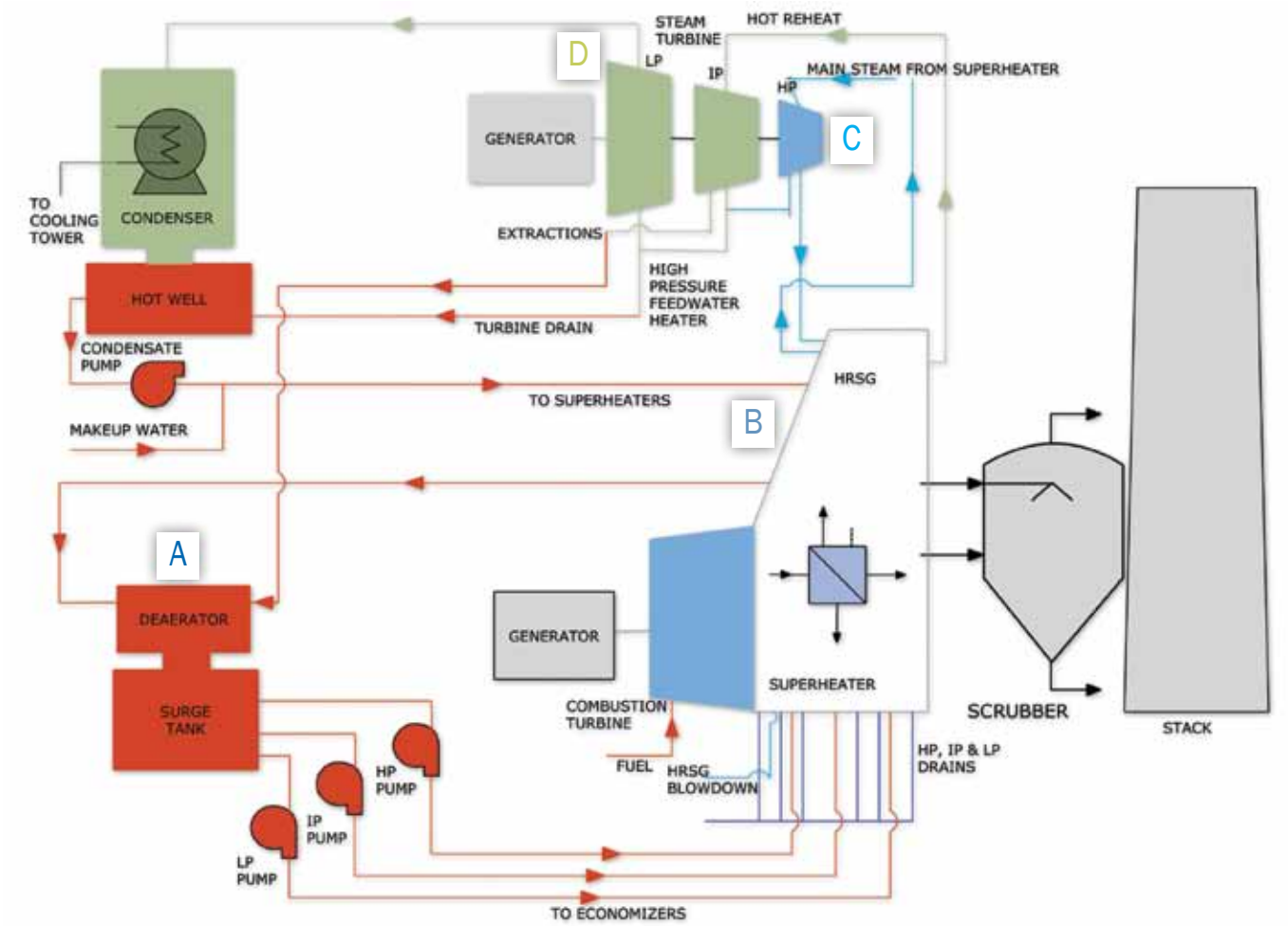

A. Feedwater System

- Deaerator Vent
- Isolation valves on Bypass Lines
- Extraction Steam Drain

B. HRSG

- Boiler Feed Pump Isolation
- Boiler Feed Pump Shell Drain
- Control Valve Isolation
- Boiler Feed Pump Warm-Up Line Drain
- Reheat / Superheat Spray Isolation
- Drum Blowdown Root Valve / Isolation Vents
- Drum Instrument Isolation
- Automatic Relief Valve
- Sight-Glass Block / Drain
- Tandem Blowdown
- Boiler Blowdown
- Primary Superheat Drain / Vent / Instrument Isolation
- Secondary Superheat Drain / Vent / Instrument Isolation
- Reheat Drain / Vent / Instrument Isolation
- Superheat Spray Block
- Reheat Spray Isolation Blocking
- LP Section HRSG Tube Drains
- IP Section HRSG Tube Drains
- HP Section HRSG Tube Drains
- Automated Bottom Blowdown

C. HP Turbine Steam Supply & Extraction Systems

- Main Steam Drain
- Main Steam Before and After Seat Drain
- Main Steam Land Drain
- Turbine Bypass Isolation
- Bypass Valves

D. IP & LP Turbine Steam Supply & Extraction Systems

- Supply Extraction Systems
- Hot Reheat Drain
- Hot Reheat at the CRV Drain
- IP and LP Turbine Extraction Drain

Typical Fossil Fueled

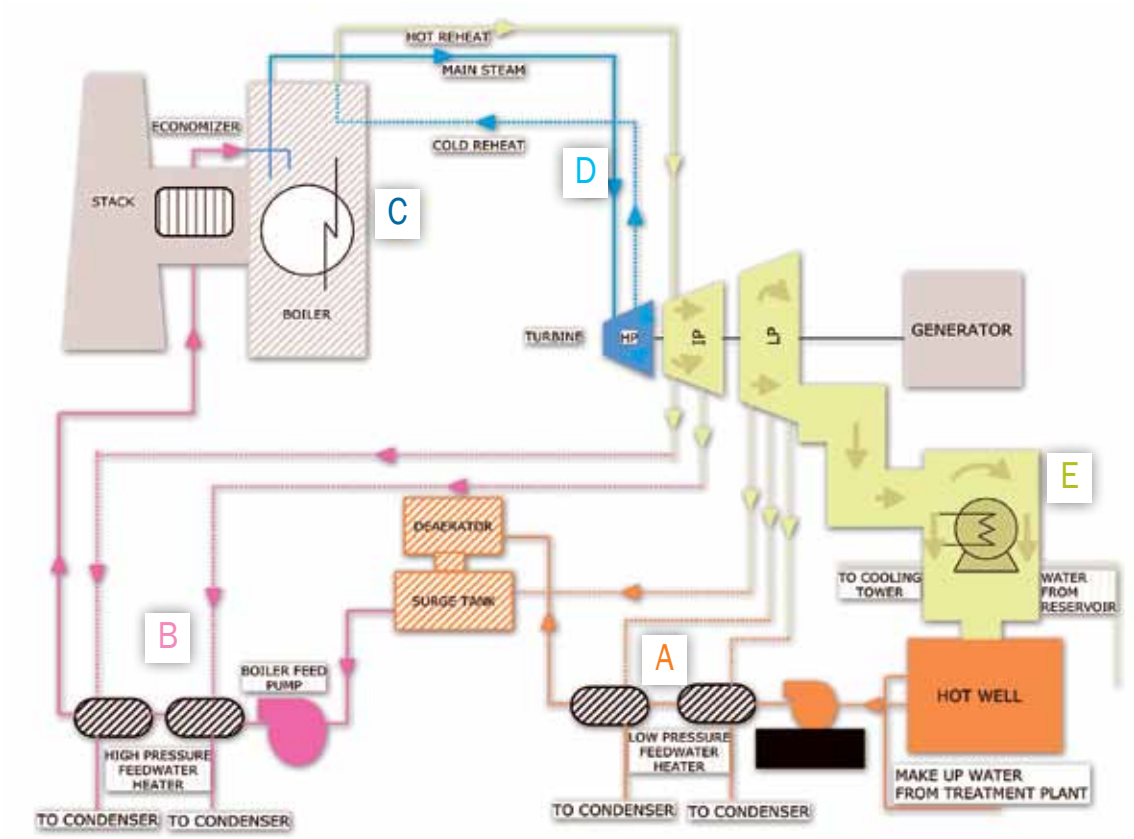

A. Condensate System

- Deaerator Vent
- Isolation Valves on Bypass lines
- Extraction Steam Drain
- Feedwater Heater Drain / Vent
- Shell Side Instrument Isolation

B. HP Feedwater

- Boiler Feed Pump Discharge Isolation
- Boiler Feed Pump Shell or Case Drain
- Boiler Feed Pump Minimum Flow Isolation
- Boiler Feed Pump Warming Line Isolation / Drain
- Reheat / Superheat Spray Isolation
- Feedwater Heater Isolation
- Bypass Valves
- Economizer Drain

C. Boiler System

- Drum Blowdown Root Valve
- Drum Instrument Isolation
- Sight-Glass Isolation
- Water Wall Drain / Vent
- Tandem Blowdown
- Mass Boiler Blowdown
- Primary Superheat Drain / Vent
- Secondary Superheat Drain / Vent
- Reheat Drain / Vent
- Superheat Spray Isolation
- Superheater Spray Automated Block
- Reheater Spray Isolation

D. HP Turbine Steam Supply and Extraction Systems

- Supply and Extraction Systems
- Main Steam Drain
- Main Steam Before and After Seat Drain
- Main Steam Lead Drain
- Turbine Bypass Isolation
- Bypass Valves

E. IP and LP Turbine Steam Supply and Extraction Systems

- Supply Extraction Systems
- Hot Reheat Drain
- IP and LP Turbine Extraction Drain

Auxiliary Systems

- Sootblower Piping System
- Sootblowing Header Isolation
- Sootblower Regulator Isolation
- Sootblower Control Valve Block
- Sootblower System Crossover Header Isolation
- Sootblower Bank Isolation
- Individual Sootblower Isolation
- Air Heater Sootblower Steam Supply Line Shutoff
- Sootblower Thermal Drains / Bypass
- HP and LP Steam Supply System to the BFP Turbine
- Main Steam Supply Isolation Valve
- HP BFP Steam Supply Drain
- HP BFP Below and Above Seat Drain
- Bypass Lines
- Extraction Steam Supply to LP BFP Turbine Drains
- LP BFP Below and Above Seat Drain
- Inerting Steam System
- Inert Steam Inlet to Pulverizer Blocking / Automated Isolation
- Steam Supply to Inerting System Pressure Regulator Isolation
- Extraction Steam Supply line to the Inerting Steam Header Drain
- Isolation Valves on the Bypass Lines
- Inserting System Steam Header Thermal Drain

SPV Features & Benefits

1. **Body** – one-piece machined forged bar stock
   - **Mechanical and chemical integrity ensured — NO body leaks**
   - **Extended integral end-connect protects during Post Weld Heat Treat (PWHT)**

2. **Ball – Omni-Lap 360°™**
   - **Optimized roundedness**
   - **100% seal eliminates leak path**

3. **Seat**
   - Optimized seat geometry **maintains maximum seal, even during thermal transience**
   - Ball and seat are same material ensuring **matched thermal expansion rates**

4. **Wave Spring**
   - Superior performance to Belleville springs
   - **More predictable force on ball to seat seal**—even at low pressure
   - **Longer spring life** means longer valve life

5. **Stem** – One piece with surface hardening
   - **Eliminates galling** potential between rotating parts
   - Stem standard ASME keyed for **reliable adaption**

6. **Packing Bushing**
   - **Prevents packing intrusion** into body
   - **Eliminates lateral stem motion**
   - **Most secure stem seal — regardless of orientation**

7. **Grafoil Packing Rings**
   - Premium die-formed
   - Pre-stressed to a specific density
   - **Optimal packing resiliency** for **extended life**

8. **Grafoil Anti-extrusion Ring**
   - Die-formed with **skive-cut Inconel wire reinforcement**
   - **Prevents packing extrusion**

9. **Packing Follower**
   - **Thermally matched to the stem** material
   - **Prevents galling** and contains upper packing

10. **Articulating Gland Flange**
    - Spherically engages with packing follower
    - **Prevents stem binding and galling** during adjustments

11. **Live Loaded Packing**
    - Standard with Belleville spring washers
    - **Eliminates routine gland adjustments**
    - **Reduces maintenance**
    - Guarantees **zero stem emissions**

12. **Open/Closed Indicator**
    - Scribed lines on stem and articulating gland flange
    - Ensures **proper ball to seat alignment**
    - **Positive Open/Closed** indicator

13. **Dual Inconel 718 Pins**
    - Oversized pins contained in thrust collars
    - **Blow-out proof stem** to ASME B16.34

14. **Outboard Guide Bearing**
    - Provides **positive stem alignment**
    - **Prevents lateral stem motion**

15. **External Stem Retaining Ring**
    - **Prevents ball misalignment** during actuator installation
    - Stem cannot be forced into ball stem slot

16. **Mounting Flange**
    - Precision machined to **ISO 5211**
    - External mounting flange provides **rigid mounting for ease of actuation**
    - Direct mounting option reduces **hysteresis and stem deflection**

17. **Handle** – T-handle style
    - **Adjusts for clearance in either direction**

18. **Precision Mechanical Stop**
    - **Prevents over-travel**
    - Both lever-operated and automated **valves are positively aligned**

19. **Lockout Standard**
    - Fulfills **Open/Closed lockout requirements**

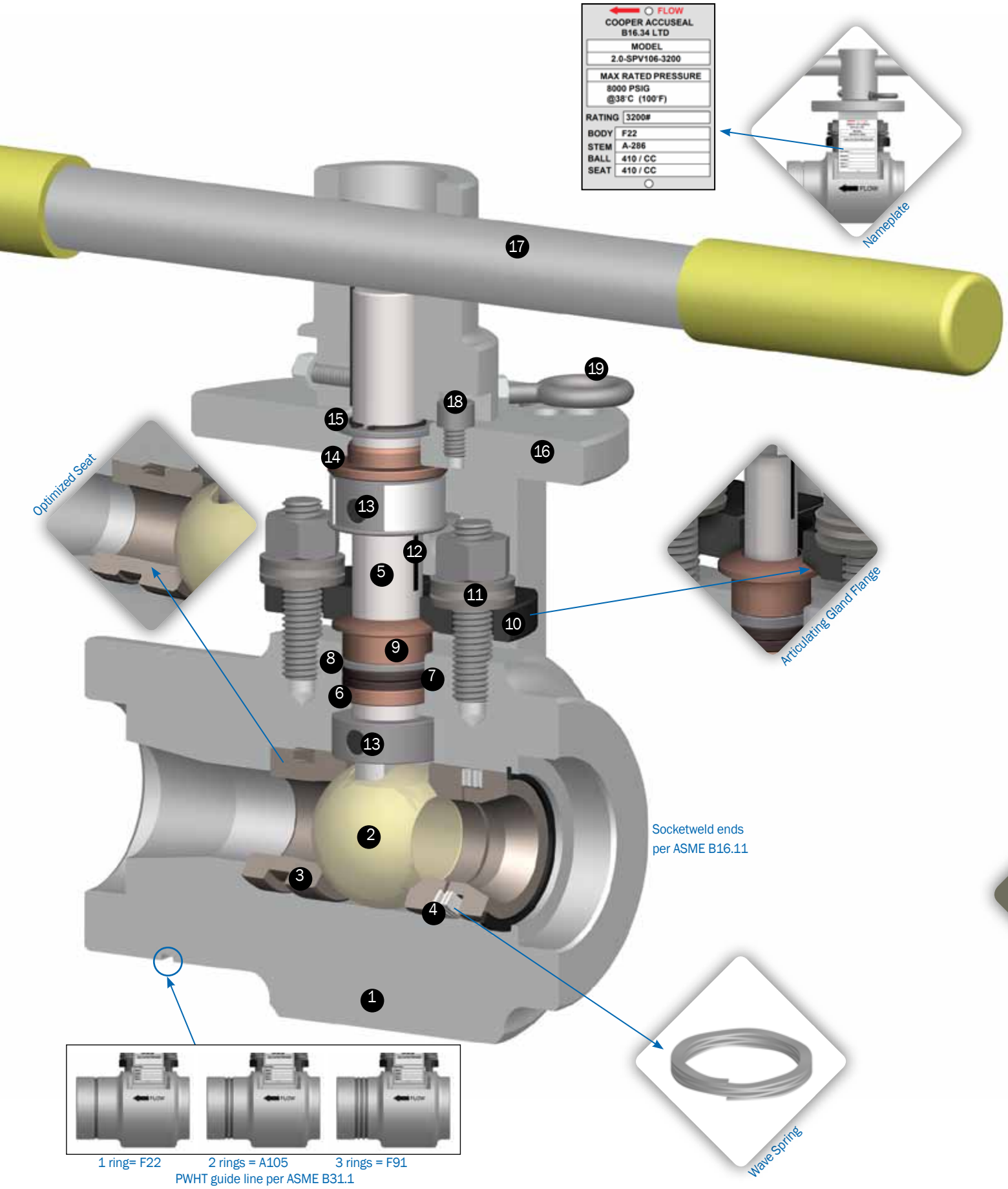
FLOW
COOPER ACCUSEAL
B16.34 LTD
MODEL
2.0-SPV106-3200
MAX RATED PRESSURE
8000 PSIG
@38°C (100°F)
RATING 3200#
BODY F22
STEM A-286
BALL 410 / CC
SEAT 410 / CC
Nameplate
Optimized Seat
Articulating Gland Flange
Socketweld ends
per ASME B16.11
Wave Spring
1 ring= F22
2 rings = A105
3 rings = F91
PWHT guide line per ASME B31.1
1
2
3
4
5
6
7
8
9
10
11
12
13
13
14
15
16
17
18
19

SPV - Steam Power Valve

Applications

- Vents and Drains during start-up and shut-down.
- An alternative to globe and gate valves giving you a straight thru bore, quarter turn, pressure assisted Omni-Lap 360°™ ball valve.

Size

½" – 2½" ***(larger sizes available)***

ASME Pressure Class

150 - 4500 Limited Class

End Connections

- SW – ASME B16.11 (Standard)
- BW – ASME B16.25
- RFF

Per customer specifications

Features and Benefits

- Omni-Lap 360°™ optimized roundedness and matched ball + seats assemblies ensure 100% seal
- Application specific coatings
- Withstands severe thermal shocks
- Vacuum tested ball and seat ensures Class VI shut-off before valve assembly
- Wave spring maximizes thermal cycling strength for longer life
- ISO 5211 Mounting Patterns

5 year warranty standard

Bill of Materials - SPV

ITEM	DESCRIPTION	MATERIAL
1	Body	A105 A182 F22 Cl.3 A182 F91
2	Ball	410 SS / CC Coating (Std. 600-3200 Cl.) Inconel 718 / Spray & Fuse (Std. 4500 Cl.)
3	Seat	410 SS / CC Coating (Std. 600-3200 Cl.) Inconel 718 / Spray & Fuse (Std. 4500 Cl.)
4	Wave Spring	A-286
5	Stem	Inconel 718 / A-286
6	Packing Bushing	316 SS
7	Packing Rings	Grafoil
8	Anti-Extrusion Ring	Inconel Wire Reinforced Grafoil
9	Packing Follower	316 SS
10	Articulating Gland Flange	4130
11	Live Loading Belleville Springs	Stainless Steel
12	Retaining Pins	Inconel 718
13	Guide Bearing	Ni-Al-Brz
14	Stem Retaining Ring	Stainless Steel
15	Mounting Flange	Carbon Steel
16	Transition Piece	410 SS
17	Load Ring/Retaining Ring	A-286

Special alloys and coatings available upon request CC = Chrome Carbide coating

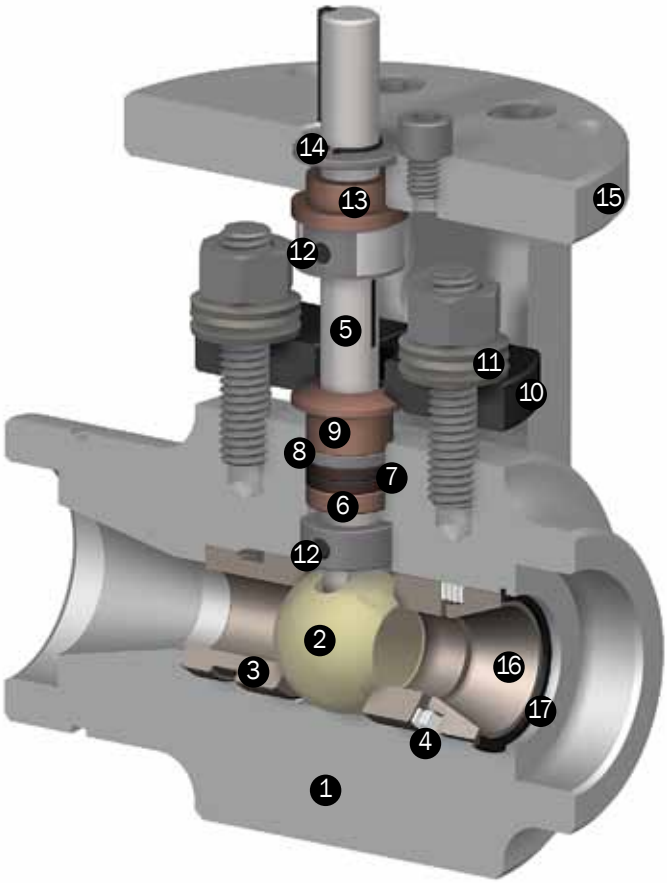

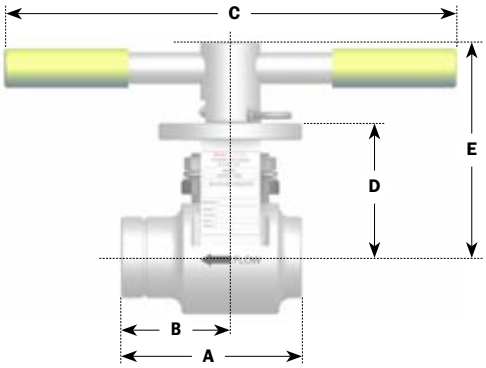

Cv – ASME 600, 900, 1500 Limited Class												
Bore (inches)	Pipe Size (inches) / Schedule											
	0.50	0.50	0.75	0.75	1.00	1.00	1.50	1.50	2.00	2.00	2.50	2.50
	SCH 80	SCH 160	SCH 80	SCH 160	SCH 80	SCH 160	SCH 80	SCH 160	SCH 80	SCH 160	SCH 80	SCH 160
0.55	6	7	15	16	12	13	-	-	-	-	-	-
0.72	-	-	-	-	24	23	21	22	-	-	-	-
1.06	-	-	-	-	-	-	51	69	45	56	-	-
1.34	-	-	-	-	-	-	-	-	100	121	82	91

Dimension – ASME 600, 900, 1500 Limited Class															
				A		B		C		D		E		Weight	
Model	Bore	Class	SW End	in	mm	in	mm	in	mm	in	mm	in	mm	lb	kg
SPV055	0.55	1500	0.50	7.51	190.75	4.00	101.60	15.00	381.00	4.45	113.03	7.15	181.61	19	8.61
	0.55	1500	0.75	6.00	152.40	4.00	101.60	15.00	381.00	4.45	113.03	7.15	181.61	19	8.61
	0.55	1500	1.00	6.00	152.40	4.00	101.60	15.00	381.00	4.45	113.03	7.15	181.61	20	9.07
SPV072	0.72	1500	1.00	6.00	152.40	3.63	92.08	15.00	381.00	4.45	113.03	7.15	181.61	19	8.61
	0.72	1500	1.50	6.00	152.40	3.63	92.08	15.00	381.00	4.45	113.03	7.15	181.61	20	9.07
SPV106	1.06	1500	1.50	7.25	184.15	4.63	117.48	18.00	457.20	5.24	133.10	7.94	201.68	31	14.06
	1.06	1500	2.00	7.25	184.15	4.63	117.48	18.00	457.20	5.24	133.10	7.94	201.68	34	15.42
SPV134	1.34	1500	2.00	8.25	209.55	5.13	130.18	18.00	457.20	5.63	143.00	8.73	221.74	45	20.41
	1.34	1500	2.50	8.25	209.55	5.13	130.18	18.00	457.20	5.63	143.00	8.73	221.74	47	21.31

Limited Class Pressure Rating vs. Temperature (ASME B16.34)																	
	Temp (°F)	-20° to 100°	200°	300°	400°	500°	600°	650°	700°	750°	800°	850°	900°	950°	1000°	1050°	1100°
	Temp (°C)	-29° to 38°	93°	149°	204°	260°	316°	343°	371°	399°	427°	454°	482°	510°	538°	566°	593°
ASME 600 LTD	A 105 (1)	1500	1500	1480	1465	1465	1465	1430	1380	1270	1030	N/A	N/A	N/A	N/A	N/A	N/A
	A 182 Gr. F11 Cl.2 (2)	1500	1500	1500	1500	1500	1500	1500	1465	1460	1440	1355	1175	801	554	369	246
	A 182 Gr. F22 Cl.3 (2)	1500	1500	1480	1455	1450	1440	1430	1415	1415	1415	1355	1200	953	687	446	282
	A 182 Gr. F91	1500	1500	1500	1500	1500	1500	1500	1465	1460	1440	1355	1200	953	862	862	774
ASME 900 LTD	A 105 (1)	2250	2250	2220	2200	2200	2200	2145	2075	1905	1545	N/A	N/A	N/A	N/A	N/A	N/A
	A 182 Gr. F11 Cl.2 (2)	2250	2250	2250	2250	2250	2250	2250	2200	2185	2160	2030	1760	1210	842	561	374
	A 182 Gr. F22 Cl.3 (2)	2250	2250	2220	2185	2175	2165	2145	2120	2120	2120	2030	1800	1433	1045	681	426
	A 182 Gr. F91	2250	2250	2250	2250	2250	2250	2250	2200	2185	2160	2030	1800	1433	1310	1310	1175
ASME 1500 LTD	A 105 (1)	3750	3750	3700	3665	3665	3665	3575	3455	3170	2570	N/A	N/A	N/A	N/A	N/A	N/A
	A 182 Gr. F11 Cl.2 (2)	3750	3750	3750	3750	3750	3750	3750	3665	3645	3600	3385	2935	2038	1442	961	641
	A 182 Gr. F22 Cl.3 (2)	3750	3750	3695	3640	3620	3605	3580	3535	3535	3535	3385	3000	2411	1784	1170	732
	A 182 Gr. F91	3750	3750	3750	3750	3750	3750	3750	3665	3645	3600	3385	3000	2411	2249	2249	2014

NOTE: MAXIMUM differential pressure across valve = 2500 psig

(1) Not recommended for prolonged use above 800°F / 427°C

(2) Not recommended for prolonged use above 1100°F / 593°C

Contact COOPER Valves for pressure classes not listed.

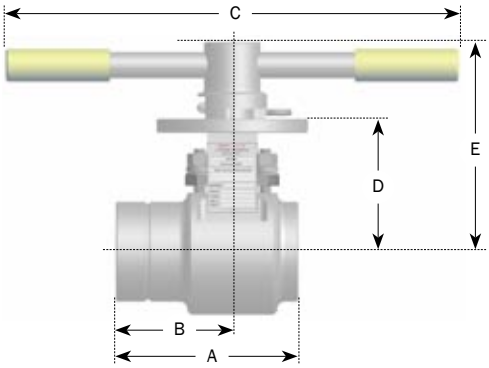

Cv – ASME 3200 Limited Class												
Bore (inches)	Pipe Size (inches) / Schedule											
	0.50	0.50	0.75	0.75	1.00	1.00	1.50	1.50	2.00	2.00	2.50	2.50
	SCH 160	SCH XXS	SCH 160	SCH XXS	SCH 160	SCH XXS	SCH 160	SCH XXS	SCH 160	SCH XXS	SCH 160	SCH XXS
0.55	7	1	16	6	13	15	-	-	-	-	-	-
0.72	-	-	-	-	23	10	26	34	-	-	-	-
1.06	-	-	-	-	-	-	69	56	59	66	-	-
1.34	-	-	-	-	-	-	-	-	144	103	90	95

Dimension – ASME 3200 Limited Class															
				A		B		C		D		E		Weight	
Model	Bore	Class	SW End	in	mm	in	mm	in	mm	in	mm	in	mm	lb	kg
SPV055	0.55	3200	0.50	7.51	190.75	4.00	101.60	15.00	381.00	4.45	113.03	7.15	181.61	19	8.61
	0.55	3200	0.75	6.00	152.40	4.00	101.60	15.00	381.00	4.45	113.03	7.15	181.61	19	8.61
	0.55	3200	1.00	6.00	152.40	4.00	101.60	15.00	381.00	4.45	113.03	7.15	181.61	20	9.07
SPV072	0.72	3200	1.00	6.00	152.40	3.62	91.95	15.00	381.00	4.54	115.32	7.24	183.90	21	9.52
	0.72	3200	1.50	6.00	152.40	3.62	91.95	15.00	381.00	4.54	115.32	7.24	183.90	24	10.88
SPV106	1.06	3200	1.50	7.25	184.15	4.63	117.48	18.00	457.20	5.27	133.86	8.27	210.06	36	16.32
	1.06	3200	2.00	7.25	184.15	4.63	117.48	18.00	457.20	5.27	133.86	8.27	210.06	40	18.14
SPV134	1.34	3200	2.00	8.25	209.55	5.13	130.18	18.00	457.20	6.25	158.75	9.25	234.95	56	25.40
	1.34	3200	2.50	8.25	209.55	5.13	130.18	18.00	457.20	6.25	158.75	9.25	234.95	61	27.66

Limited Class Pressure Rating vs. Temperature (ASME B16.34)																	
	Temp (°F)	-20° to 100°	200°	300°	400°	500°	600°	650°	700°	750°	800°	850°	900°	950°	1000°	1050°	1100°
	Temp (°C)	-29° to 38°	93°	149°	204°	260°	316°	343°	371°	399°	427°	454°	482°	510°	538°	566°	593°
ASME 3200 LTD	A 105 (1)	8000	8000	7896	7818	7818	7818	7629	7370	6765	5485	N/A	N/A	N/A	N/A	N/A	N/A
	A 182 Gr. F11 Cl.2 (2)	8000	8000	8000	8000	8000	8000	8000	7818	7773	7680	7224	6261	4456	3337	2225	1483
	A 182 Gr. F22 Cl.3 (2)	8000	8000	7885	7762	7725	7690	7634	7541	7541	7541	7224	6400	5269	4131	2703	1693
	A 182 Gr. F91	8000	8000	8000	8000	8000	8000	8000	7818	7773	7680	7224	6400	5269	5200	5200	4660

NOTE: MAXIMUM differential pressure across valve = 4500 psig

(1) Not recommended for prolonged use above 800°F / 427°C

(2) Not recommended for prolonged use above 1100°F / 593°C

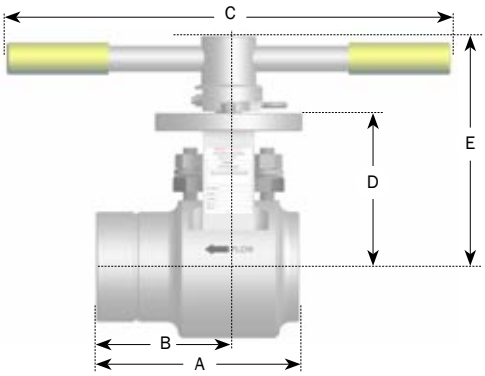

Cv – ASME 4500 Limited Class												
Bore (inches)	Pipe Size (inches) / Schedule											
	0.50	0.50	0.75	0.75	1.00	1.00	1.50	1.50	2.00	2.00	2.50	2.50
	SCH 160	SCH XXS	SCH 160	SCH XXS	SCH 160	SCH XXS	SCH 160	SCH XXS	SCH 160	SCH XXS	SCH 160	SCH XXS
0.66	-	-	12	5	21	14	21	21	-	-	-	-
1.00	-	-	-	-	-	-	49	50	48	54	44	48

Dimension – ASME 4500 Limited Class															
				A		B		C		D		E		Weight	
Model	Bore	Class	SW End	in	mm	in	mm	in	mm	in	mm	in	mm	lb	kg
SPV066	0.66	4500	0.75	8.50	215.90	4.75	120.65	18.00	457.20	5.09	129.29	7.79	197.87	31	14.06
	0.66	4500	1.00	7.25	184.15	4.75	120.65	18.00	457.20	5.09	129.29	7.79	197.87	30	13.60
	0.66	4500	1.50	7.25	184.15	4.75	120.65	18.00	457.20	5.09	129.29	7.79	197.87	35	15.87
SPV100	1.00	4500	1.50	8.25	209.55	5.38	136.53	18.00	457.20	6.25	158.75	9.35	237.49	54	24.49
	1.00	4500	2.00	8.25	209.55	5.38	136.53	18.00	457.20	6.25	158.75	9.35	237.49	60	27.21
	1.00	4500	2.50	8.25	209.55	5.38	136.53	18.00	457.20	6.25	158.75	9.35	237.49	63	28.57

Limited Class Pressure Rating vs. Temperature (ASME B16.34)																	
	Temp (°F)	-20° to 100°	200°	300°	400°	500°	600°	650°	700°	750°	800°	850°	900°	950°	1000°	1050°	1100°
	Temp (°C)	-29° to 38°	93°	149°	204°	260°	316°	343°	371°	399°	427°	454°	482°	510°	538°	566°	593°
ASME 4500 LTD	A 105 (1)	11250	11250	11105	10995	10995	10995	10730	10365	9515	7715	N/A	N/A	N/A	N/A	N/A	N/A
	A 182 Gr. F11 Cl.2 (2)	11250	11250	11250	11250	11250	11250	11250	10995	10930	10800	10160	8805	6390	5017	3345	2230
	A 182 Gr. F22 Cl.3 (2)	11250	11250	11090	10915	10865	10815	10735	10605	10605	10605	10160	9000	7555	6213	4063	2546
	A 182 Gr. F91	11250	11250	11250	11250	11250	11250	11250	10995	10930	10800	10160	9000	7555	7555	7555	7006

NOTE: MAXIMUM differential pressure across valve = 6000 psig (1) Not recommended for prolonged use above 800°F / 427°C (2) Not recommended for prolonged use above 1100°F / 593°C


High Pressure Drum Valve


Main Steam Drain Valve


Instrument Sensor Isolation Valve


Water Wall Drain Valve

CSV - Critical Service Valve

Applications

- Critical Isolation
- Custom designed to solve problem applications

Size

½" – 30" (larger sizes available)

ASME Pressure Class

150 - 4500 (standard, limited and special classes)

End Connections

- Per customer specifications

Uni-directional – Standard

- Bi-directional – optional

Features and Benefits

- **Omni-Lap 360°™** ball and seat
- Application specific coatings
- Coating matched to ball and seat materials to withstand thermal shocks
- Articulating gland flange prevents stem binding and galling during adjustments
- External and internal guide bearings insure proper alignment preventing lateral motion of the stem, even during side loading
- Replaceble ball and seats provide field repairability

***1 year warranty standard** (contact COOPER® Accuseal for details)*

Bill of Materials - CSV

ITEM	DESCRIPTION	MATERIAL
1	Body	A105 A182 F22 Cl.3 A182 F91
2	Ball	410 SS / CC Coating Inconel 718 / Spray & Fuse
3	Seats	410 SS / CC Coating Inconel 718 / Spray & Fuse
4	Belleville Spring	Inconel 718
5	Stem	A-286
6	Inner Stem Seal	410 SS / CC Coting
7	Packing Bushing	316 SS
8	Packing Rings	Grafoil
9	Anti-Extrusion Ring	Inconel Wire Reinforced Grafoil
10	Packing Follower	316 SS
11	Articulating Gland Flange	410 SS
12	Live Loading Belleville Springs	Stainless Steel
13	Stem Retaining Ring	Stainless Steel
14	Mounting Flange	Carbon Steel
15	Body Gasket	Spiral Wound Grafoil Filled/ Inconnel 718 Gold Plated

Special alloys and coatings available upon request. CC = Chrome Carbide coating

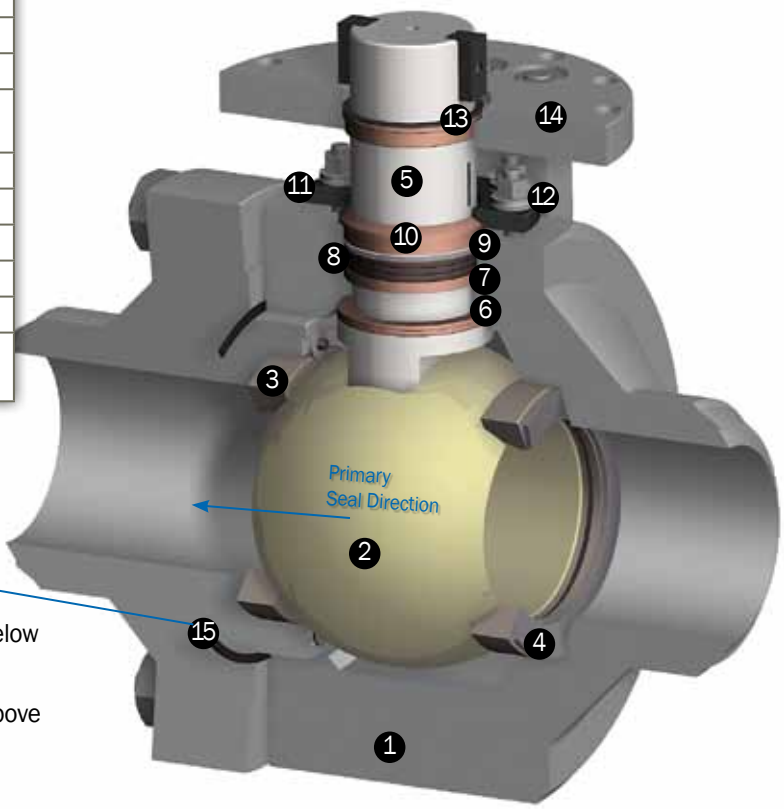

Body Gaskets

Spiral Wound Gaskets

- Grafoil filled
- 1500 pressure class and below

Engineered Body Seal

- 2500 pressure class and above
- Gold-plated Inconel 718
- Pressure assisted seal

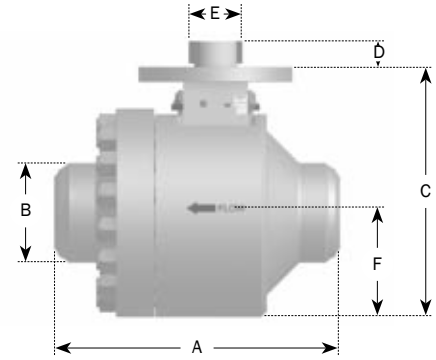

CSV – Bore							
NPS (inches)	150	300	600	900	1500	2500	4500
0.5	0.55	0.55	0.55	0.55	0.55	0.55	Note 1
0.75	0.72	0.72	0.72	0.72	0.72	0.72	Note 1
1	1.06	1.06	1.06	1.06	1.06	1.06	Note 1
1.5	1.50	1.50	1.50	1.50	1.50	1.06	Note 1
2	2.00	2.00	2.00	2.00	2.00	1.50	Note 1
2.5	2.50	2.50	2.50	2.13	2.13	1.77	Note 1
3	3.00	3.00	3.00	3.00	2.62	2.30	Note 1
4	4.00	4.00	4.00	3.62	3.44	3.15	Note 1
6	6.00	6.00	6.00	5.50	5.19	4.90	Note 1
8	8.00	8.00	7.87	7.19	6.81	6.81	Note 1
10	10.00	10.00	9.75	9.06	8.50	8.50	Note 1
12	12.00	12.00	11.75	10.75	10.13	10.13	Note 1

CSV Cv – Full Bore							
Valve Size (inches)	150	300	600	900	1500	2500	4500
0.5	25	22	21	18	18	16	Note 1
0.75	54	48	43	39	39	36	Note 1
1	144	126	110	102	102	92	Note 1
1.5	270	251	223	198	198	83	Note 1
2	549	498	429	382	382	163	Note 1
2.5	948	842	720	421	421	236	Note 1
3	1474	1250	1114	1076	682	438	Note 1
4	2932	2539	2134	1600	1283	919	Note 1
6	6393	6316	5366	4101	3281	2482	Note 1
8	12497	11931	9966	7468	6106	5508	Note 1
10	20612	19966	15889	12737	9933	8772	Note 1
12	30897	29974	24953	18475	14641	13051	Note 1

CSV 0.5" - 12" Dimensions								
	Size (inches)	Bore	A	B	C	D	E	F
ASME150	0.5	0.55	4.25	0.90	4.17	1.10	0.50	1.88
	0.75	0.72	4.62	1.18	4.87	1.10	0.50	2.09
	1	1.06	5.00	1.50	5.24	1.31	0.75	2.44
	1.5	1.50	6.50	2.09	5.64	1.63	0.88	2.75
	2	2.00	7.00	2.57	5.87	1.31	0.75	3.00
	2.5	2.50	7.50	3.00	6.12	1.66	1.19	3.50
	3	3.00	8.00	3.63	5.56	1.18	0.88	3.75
	4	4.00	9.00	4.59	7.29	2.02	1.38	5.00
	6	6.00	15.50	6.73	9.92	2.59	2.25	7.00
	8	8.00	18.00	8.68	11.51	2.03	2.50	8.13
	10	10.00	21.00	10.75	13.86	2.68	2.75	10.50
	12	12.00	24.00	12.82	15.68	2.50	3.00	12.00
ASME 300	0.5	0.55	5.50	0.94	4.36	1.10	0.50	1.88
	0.75	0.72	6.00	1.22	4.87	1.10	0.50	2.09
	1	1.06	6.50	1.56	5.24	1.31	0.75	2.44
	1.5	1.50	7.50	1.94	5.98	1.63	0.88	2.75
	2	2.00	8.50	2.63	5.97	1.66	1.06	3.25
	2.5	2.50	9.50	3.06	6.12	1.66	1.19	3.50
	3	3.00	8.00	3.63	5.56	1.18	0.88	3.75
	4	4.00	9.00	4.59	7.29	2.02	1.38	5.00
	6	6.00	15.50	6.73	9.92	2.59	2.25	7.00
	8	8.00	18.00	8.68	11.51	2.03	2.50	8.13
	10	10.00	21.00	10.75	13.86	2.68	2.75	10.50
	12	12.00	24.00	12.82	15.68	2.50	3.00	12.00
ASME 600	0.5	0.55	6.50	0.94	4.36	1.10	0.50	1.88
	0.75	0.72	7.50	1.18	5.13	1.10	0.50	2.09
	1	1.06	8.50	1.56	5.24	1.31	0.75	2.44
	1.5	1.50	9.50	2.00	5.98	1.63	0.88	2.75
	2	2.00	11.50	2.56	6.25	1.66	1.06	3.25
	2.5	2.50	13.00	3.12	6.25	1.87	1.50	3.75
	3	3.00	14.00	3.69	7.31	1.27	1.38	4.13
	4	4.00	17.00	4.82	7.83	3.00	2.06	5.75
	6	6.00	22.00	7.06	10.66	2.38	2.50	7.25
	8	7.87	26.00	9.17	13.92	2.72	3.25	8.44
	10	9.75	31.00	11.31	17.32	4.50	4.00	11.63
	12	11.75	33.00	13.63	20.40	4.00	5.00	12.75

CSV 0.5" - 12" Dimensions								
	Size (inches)	Bore	A	B	C	D	E	F
ASME 900	0.5	0.55	8.50	4.75	4.17	0.50	1.10	2.25
	0.75	0.72	9.00	5.12	4.89	0.50	1.10	2.25
	1	1.06	10.00	5.88	5.62	0.75	1.31	2.94
	1.5	1.50	12.00	7.00	7.22	1.06	1.66	3.50
	2	2.00	14.50	8.50	6.38	1.19	1.66	3.50
	2.5	2.13	16.50	9.63	6.53	1.50	1.87	3.75
	3	3.00	15.00	3.90	8.32	2.50	1.50	4.25
	4	3.62	18.00	4.64	10.46	3.00	2.06	5.75
	6	5.50	24.00	7.00	11.13	2.25	3.00	7.50
	8	7.19	29.00	8.97	12.96	2.94	3.63	9.25
	10	9.06	33.00	11.25	14.56	4.50	4.50	10.75
	12	10.75	38.00	13.29	16.44	4.50	5.50	12.00
ASME 1500	0.5	0.55	8.50	4.75	4.17	0.50	1.10	2.25
	0.75	0.72	9.00	5.12	4.89	0.50	1.10	2.25
	1	1.06	10.00	5.88	5.62	0.75	1.31	2.94
	1.5	1.50	12.00	7.00	7.22	1.06	1.66	3.50
	2	2.00	14.50	8.50	6.38	1.19	1.66	3.50
	2.5	2.13	16.50	9.63	6.53	1.50	1.87	3.75
	3	2.62	18.50	3.92	9.28	2.50	1.75	4.50
	4	3.44	21.50	5.00	9.10	2.84	2.50	6.12
	6	5.19	27.75	7.43	13.04	3.00	3.38	7.75
	8	6.81	32.75	9.69	16.49	5.00	4.00	9.50
	10	8.50	39.00	11.94	17.40	4.50	5.50	11.50
	12	10.13	44.50	14.19	18.20	4.50	6.75	13.25
ASME 2500	0.5	0.55	10.38	1.20	5.25	1.10	0.50	2.50
	0.75	0.72	10.75	1.60	6.13	1.31	0.69	2.75
	1	1.06	12.12	2.18	6.67	1.63	0.88	3.00
	1.5	1.06	15.12	2.80	6.67	1.66	1.19	3.00
	2	1.50	17.75	3.64	6.49	2.63	1.75	3.50
	2.5	1.77	20.00	3.33	9.24	2.82	1.63	4.25
	3	2.30	22.75	4.26	10.42	1.81	1.75	4.50
	4	3.15	26.50	5.79	11.44	2.84	2.50	6.50
	6	4.90	36.00	8.58	13.21	6.80	3.38	8.50
	8	6.81	40.25	11.89	16.80	5.00	5.25	9.75
	10	8.50	50.00	14.62	17.66	6.50	7.50	11.75
	12	10.13	56.00	17.47	18.88	6.50	8.00	13.50

1. ASME 4500 pressure class bore / Cv varies according to application (values determined based on customer needs). Contact COOPER® Accuseal for sizes and pressure classes not listed.

ARV - Automated Relief Valve

Applications

- Steam overpressure protection boiler systems
- Venting assistance for start-up and shut-down

Inlet Size

1½”, 2”, 2½”

Bore Size

1.00, 1.75, 2.00

Orifice Size

0.56” – 2”

Outlet Size

3” 300, 4” 300 ASME Standard Class
Other options available upon request

ASME Pressure Class

1500, 2500, 3100 LTD, 4500 LTD

End Connections

- BW
- RFF

Per customer specifications

Features and Benefits

- Reduces maintenance and increases boiler efficiency by operating at lower pressure than spring-loaded safety valves
- Omni-Lap 360° ™ ball and seat assemblies
- Optimized flanged seat geometry maintains maximum seal, even during thermal transience
- True field repairability with ball and seat kit
- Vacuum tested ball and seat ensure Class VI shut-off prior to valve assembly
- Wave spring maximizes thermal cycling strength for longer life

1 year warranty standard (contact COOPER® Accuseal for details)

Bill of Materials - ARV

ITEM	DESCRIPTION	MATERIAL
1	Body	A182 F22 Cl.3 A182 F91
2	Ball	Inconel 718 / Spray & Fuse
3	Seat	Inconel 718 / Spray & Fuse
4	Wave Spring	A-286
5	Load Ring	410 SS Nitrided
6	Spacer	410 SS
7	Stem	A-286
8	Packing Bushing	316 SS
9	Packing Rings	Grafoil
10	Anti-Extrusion Rings	Inconel Wire Reinforced Grafoil
11	Packing Follower	316 SS
12	ArticulatingGland Flange	4130
13	Live Loading Belleville Springs	Stainless Steel
14	Stem Retaining Ring	Stainless Steel
15	Mounting Flange	Carbon Steel
16	Body Gasket	Dieformed Grafoil

Special alloys and coatings available upon request.

ARV 2.5” x 1.75” 3100 with CSV isolation

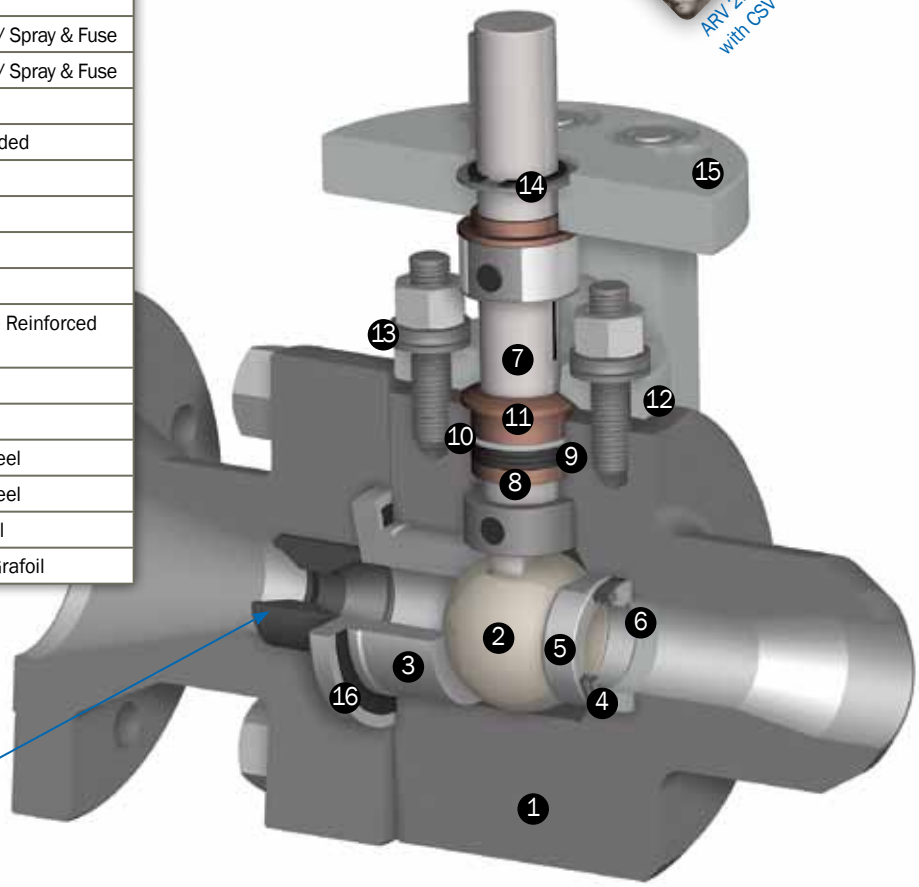

Application specified orifice

The ARV design provides automatic or manual over pressure protection for steam boiler systems. Operation at lower pressure set point than spring-loaded safety valve reduces lifts, maintenance and increases boiler efficiency.

Control Package Includes

- Pressure switch
- Solenoid
- Limit switch
- Control station

Operates in less than two seconds increasing sealing component life.

Field Repair Kit

Ball & Seat

- Inconel 718 ball and seat
- Fused carbide coating
- **Omni-Lap 360°™**
- Computer optimized sealing geometry

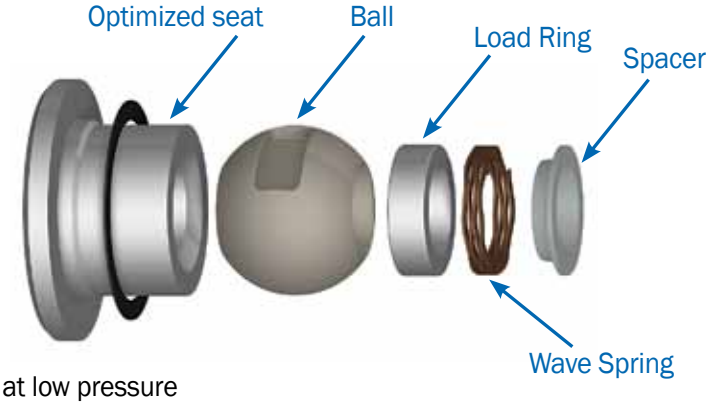

Wave Spring

- Superior performance to Belleville springs
- **More predictable force on ball to seat seal**—even at low pressure
- **Longer spring life** means longer valve life

Standard Class Pressure Rating vs. Temperature (ASME B16.34)																
	Temp (°F)	800°	850°	900°	950°	1000°	1010°	1020°	1030°	1040°	1050°	1060°	1070°	1080°	1090°	1100°
	Temp (°C)	427°	454°	482°	510°	538°	543°	549°	554°	560°	566°	571°	577°	582°	588°	593°
ASME 1500	A 182 Gr. F22 Cl.3 (1) (2)	2500	2435	2245	1930	1335	1243	1151	1059	967	875	810	745	680	615	550
	A 182 Gr. F91 (2)	2500	2435	2245	1930	1820	1816	1812	1808	1804	1800	1742	1684	1626	1568	1510
ASME 2500	A 182 Gr. F22 Cl.3 (1) (2)	2500	2500	2500	2500	2230	2075	1920	1765	1610	1455	1347	1239	1131	1023	915
	A 182 Gr. F91 (2)	2500	2500	2500	2500	2500	2500	2500	2500	2500	2500	2500	2500	2500	2500	2500

Limited Class Pressure Rating vs. Temperature (ASME B16.34)																
	Temp (°F)	800°	850°	900°	950°	1000°	1010°	1020°	1030°	1040°	1050°	1060°	1070°	1080°	1090°	1100°
	Temp (°C)	427°	454°	482°	510°	538°	543°	549°	554°	560°	566°	571°	577°	582°	588°	593°
ASME 3100 LTD	A 182 Gr. F22 Cl.3 (1) (2)	3000	3000	3000	3000	3000	3000	3000	3000	2879	2603	2410	2216	2022	1828	1635
	A 182 Gr. F91 (2)	3000	3000	3000	3000	3000	3000	3000	3000	3000	3000	3000	3000	3000	3000	3000
ASME 4500 LTD	A 182 Gr. F22 Cl.3 (1) (2)	4500	4500	4500	4500	4500	4500	4500	4500	4493	4063	3760	3456	3153	2849	2546
	A 182 Gr. F91 (2)	4500	4500	4500	4500	4500	4500	4500	4500	4500	4500	4500	4500	4500	4500	4500

NOTES: (1) Permissible, but not recommended for prolonged use above 1100°F / 593°C

(2) Flanged-end valve ratings terminate at 1000°F / 538°C

COOPER® Valves manufactures to ASME B16.34

Certifications

ISO 9001: 2008

PED/CE

CRN

Actuation

- **ISO 5211 Mounting Patterns**
- **COOPER® Valves automates to customer specifications**

COOPER® Accuseal Product Warranty

SPV – Steam Power Valves

- **Standard: 5 years**
- **High cycle: 1 year**

CSV – Critical Service Valves

- **Standard: 1 year**

ARV – Automated Relief Valves

- **Standard: 1 year**

Contact COOPER® Valves for additional warranty information

COOPER® Accuseal Product Test Procedures

- **Standard valve testing to meet or exceed MSS SP-61 and FCI 70-2 Class VI**
- **Exclusive vacuum testing of ball and seat to verify seal prior to valve assembly**







COOPER® Valves

4659 Wright Rd

Stafford, Texas 77477

Phone: +1.800.480.0832 • Fax: +1.281.573.0950

www.coopervalves.com